Technical data sheet

Mesh cable tray GR 105

Item no. 6003605

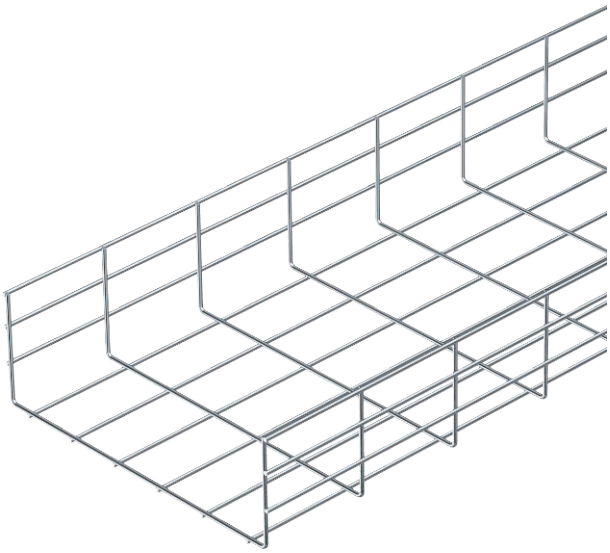

Mesh cable tray made of spot-welded steel wire of side height 105 mm.

The grid dimension is 50 x 100 mm.
Joint connectors GSV 34 should be ordered separately and in the appropriate quantity.

Magnetic shield insulation without cover 15 dB, with cover 25 dB.

St	Steel
FT	Hot-dip galvanised

Master data

Item no.	6003605
Type	GR 105 600 FT
Description 1	Mesh cable tray GR
Dimension	105x600x3000
Material	Steel
Material symbol	St
Surface	Hot-dip galvanised
Surface to DIN	DIN EN ISO 1461
Surface symbol	FT
Smallest sales unit (VG)	3 m
Weight	370,20 kg/100 m

Technical data

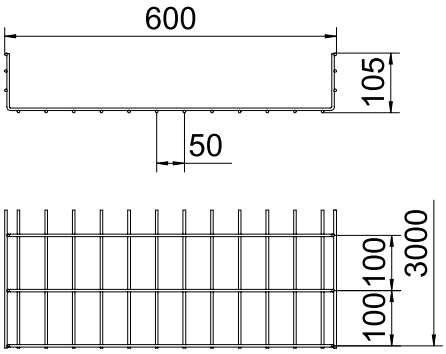

Length	3.000,00 mm
Width	600,00 mm
Height	105,00 mm
Side height	105,00 mm
Dimension B	600,00 mm
Dimension	105 x 600 mm
Connector version	Without connectors
Wire diameter	4,80 mm
Suitable for maintaining electrical function	□
Integrated partition	Without
Usable cross-section	554,00 cm²
Usable cross-section	55.400,00 mm²
Profile shape	U-shaped
Rustproof steel, pickled	□
Wide-span version	□

Appr. load:

Support spacing 1.0 m	1,70 kN/m
Support spacing 1.5 m	0,80 kN/m
Support spacing 2.0 m	0,50 kN/m

Technical data sheet

Mesh cable tray GR 105

Item no. 6003605

Technical data

Appr. load:

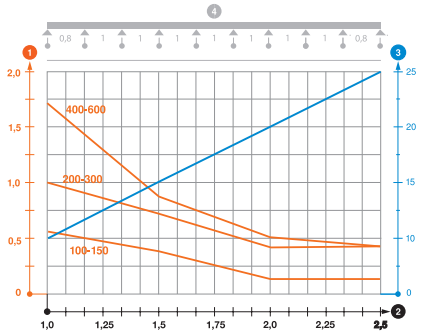

Support spacing 2.5 m	0,40 kN/m

Load diagram, mesh cable tray, type GR 105

1. Permitted cable tray/ladder load in kN/m without man load
2. Support width in m
3. Rail bend in mm at permitted kN/m
4. Load scheme during testing

— Load curve with cable tray/ladder width in mm

— Strut bend curve according to support width