Technical data sheet

Clamp clip, single, FT metal pressure trough

Item number: 1156152

Suitable for all C profile rails with slot width 16–17 mm.
Clip, bolt and pressure trough made of hot-dip galvanised steel.
Version with welding and/or locknuts for use under difficult circumstances and for shake protection on request.

CE H 16-17 E30 E90

St Steel

FT Hot-dip galvanised

Master data

Item number	1156152
Type	2056 M 90 FT
Description 1	Clamp clip
Description 2	with metal pressure sump
Manufacturer	OBO
Dimension	82-90mm
Material	Steel
Surface	Hot-dip galvanised
Surface standard	DIN EN ISO 1461
Smallest sales unit	25
Unit of quantity	Piece
Weight	23.3 kg
Weight unit	kg/100 pc.
CO2 Footprint (GWP) Cradle-to-Gate	0,536 kg COe / 1 Piece

Technical data sheet

Clamp clip, single, FT metal pressure trough

Item number: 1156152

Dimensions

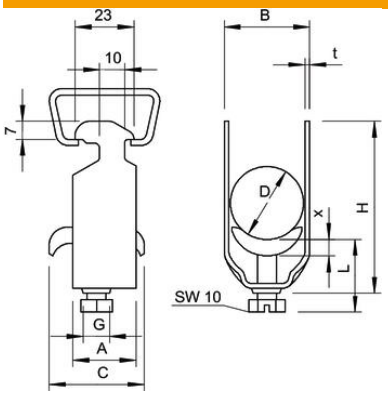

Dimension A	25 mm
Dimension B	97 mm
Dimension C	40 mm
Dimension G (mm)	M8
Dimension H	130 mm
Dimension L	56 mm
Dimension t	3 mm
Dimension x	5 mm

Technical data

Number of cables/pipes	1
for 1 cable H	130 mm
for 1 cable L	56
for rail with slot width (with interval), max.	17 mm
for rail with slot width (with interval), min.	16 mm
Halogen-free	no
Max. Tightening torque	5 Nm
With plastic trough	no
With metal trough	yes
Mounting type	Profile rail
Impact-resistant	no
Clamping range D, max.	90 mm
Clamping range D, min.	82 mm
Surface addition	hot galvanised
Material addition	Steel
With counter-trough	no
Material of trough	Steel