Technical data sheet

Clamp clip, single, FT metal pressure trough

Item number: 1156047

Suitable for all C profile rails with slot width 16–17 mm.
Clip, bolt and pressure trough made of hot-dip galvanised steel.
Version with welding and/or locknuts for use under difficult circumstances and for shake protection on request.

CE UKCA H 16-17 E30 E90

St Steel

FT Hot-dip galvanised

Master data

Item number	1156047
Type	2056 M 34 FT
Description 1	Clamp clip
Description 2	with metal pressure sump
Manufacturer	OBO
Dimension	28-34mm
Material	Steel
Surface	Hot-dip galvanised
Surface standard	DIN EN ISO 1461
Smallest sales unit	100
Unit of quantity	Piece
Weight	7.7 kg
Weight unit	kg/100 pc.
CO2 Footprint (GWP) Cradle-to-Gate	0,1595 kg COe / 1 Piece

Technical data sheet

Clamp clip, single, FT metal pressure trough

Item number: 1156047

Dimensions

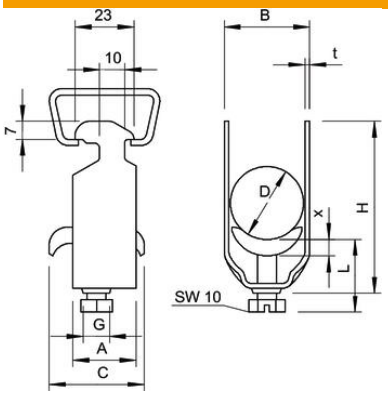

Dimension A	23 mm
Dimension B	39 mm
Dimension C	35 mm
Dimension G (mm)	M8
Dimension H	66 mm
Dimension L	44 mm
Dimension t	2 mm
Dimension x	5 mm

Technical data

Number of cables/pipes	1
for 1 cable H	66 mm
for 1 cable L	44
For pipe diameter, max.	32 mm
For pipe diameter, min.	32 mm
for rail with slot width (with interval), max.	17 mm
for rail with slot width (with interval), min.	16 mm
Halogen-free	no
Max. Tightening torque	5 Nm
With plastic trough	no
With metal trough	yes
Mounting type	Profile rail
Impact-resistant	no
Clamping range D, max.	34 mm
Clamping range D, min.	28 mm
Surface addition	hot galvanised
Material addition	Steel
With counter-trough	no
Material of trough	Steel